Primary lithium battery system
BA 5590 B/U

12 V/24 V Primary lithium sulfur dioxide ($LiSO_2$) battery

The battery consists of 10 LO 26 SX cells connected in 2 groups of 5 cells in series providing 2 nominal 12 V sections at connector. These sections can be connected in series (for 24 V) in parallel (for 12 V), or used as two separate 12 V units.



Key Features

- A non-replaceable fuse is incorporated in the negative leg of each series group of cells
- A normally closed high temperature switch or thermal fuse is incorporated into each series group of cells to protect against overheating
- A diode is incorporated into the positive leg of each series group of cells to prevent charging or flow of current into the battery
- For safe end of life recycling, there is an identified pull-tab to fully discharge the battery

Typical applications

- AN/PRC-104 Radio
- AN/PRC-113 Radio
- AN/PRC-117 Radio
- AN/PRC-119 Sincgards Radio
- AN/PRC 150
- KY-57, KY-65 Encryption set
- REMBASS Remotely monitored battlefield surveillance system
- PLRS position locator and reporting system
- RT-991 buoy radio
- RT-1175 buoy radio
- AN/TAS-4A TOW night sight

Electrical characteristics	12 V mode	24 V mode
Maximum OCV	15 V	30 V
Nominal voltage (at 500 mA)	13.5 V	27 V
Cut-off	10 V	20 V
Typical capcity +21°C / +70°F	15 Ah at 12 V	
(at 2 A discharge current)	7.5 Ah at 24 V	
Operating temperature	-40°C to +71°C / -40°F to +160°F	
Storage (Recommended max)	+35°C / +95°F	
(Possilbe)	-40°C to +71°C / -40°F to +160°F	

Physical characteristics	Metric	Imperial
Typical weight	1,000 g	35.3 oz
Weight of Li metal content	24.0 g	0.85 oz
Width	62.2 mm	2.45 in
Height	111.8 mm	4.40 in
Depth	127.0 mm	5.00 in
Battery case	Plastic	

References	
Mating connector	IT Cannon CA 110821-6
Reference specifications	MIL PRF 49471B or Saft standard specification
Nato Stock Number (BA 5590/U)	6135-01-438-9450
	6135-01-036-3495
CAGE code	7X634

saft

BA 5590 B/U

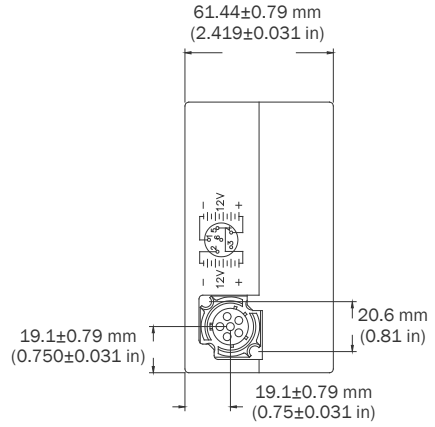

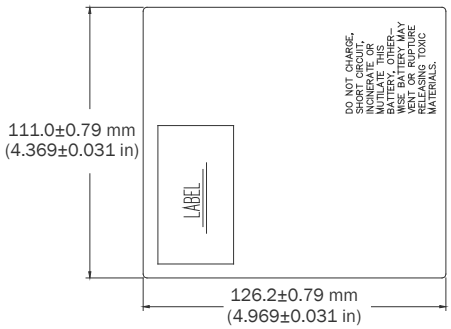

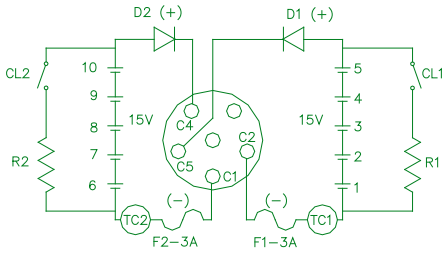

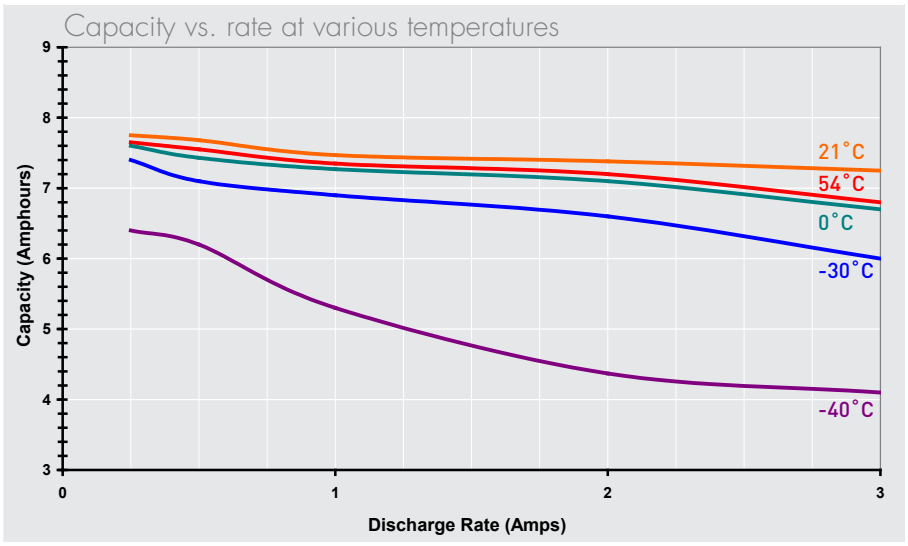

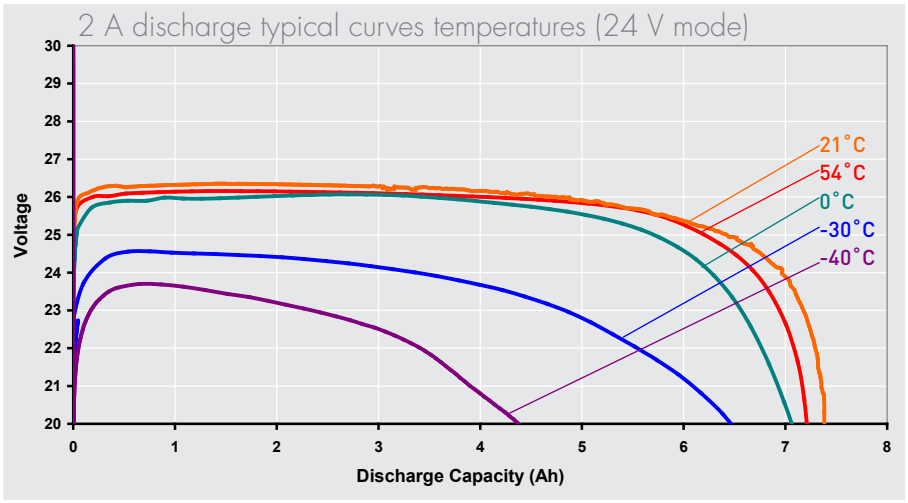

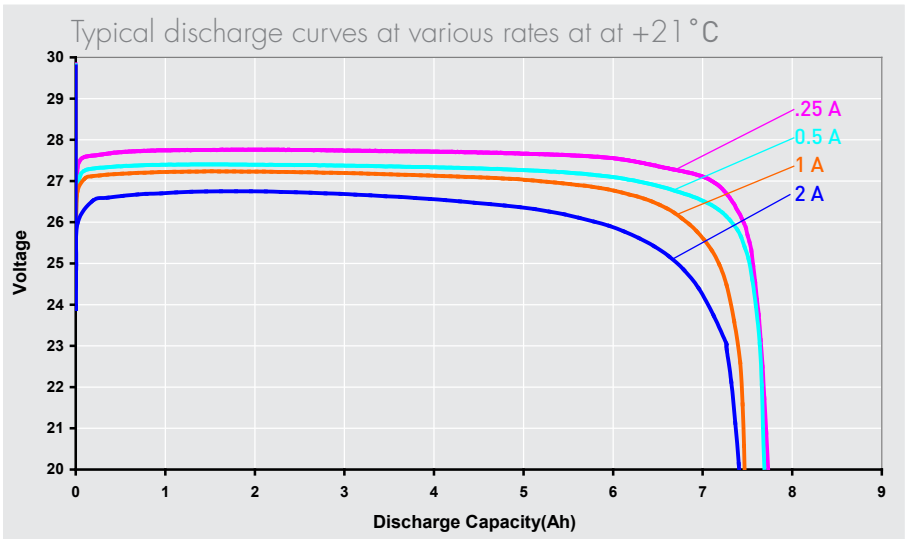

Saft
26, quai Charles Pasqua
92300 Levallois-Perret- France
Tel.: +33 (0)1 49 93 19 18
Fax: +33 (0)1 49 93 19 69
www.saftbatteries.com

Saft
313 Crescent St.
Valdese, NC 28690 - USA
Tel.: +1 (828) 874 4111
Fax: +1 (828) 874 3981
www.saftbatteries.com

Doc N° 31102-2-0717
Edition: July 2017

Information in this document is subject to change without notice and becomes contractual only after written confirmation by Saft.

Published by the Communications Department
Photo credit: Saft