CPC 33-12I

Cyclic battery

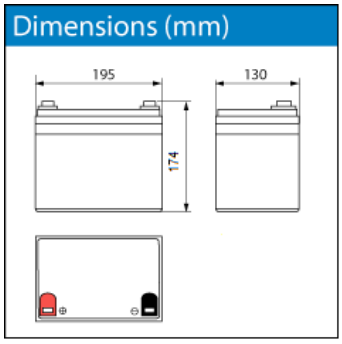

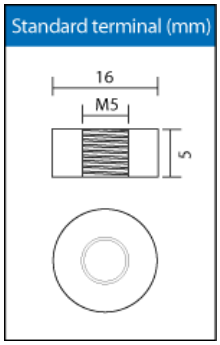

Nominal voltage		12 V DC
Nominal Capacity (10HR,20°C):		33 Ah
Nominal Capacity (20HR,20°C):		35 Ah
Internal resistance		Approx. 12 m Ω
Maximum charging current		9.9 A
Maximum discharge current		495 A (5 sec.)
Operating temperature range		-20°C ~ 50°C
Float use/ cycle use		13.6 – 13.8V/ 14.5 – 14.9V
Standard terminal		Threaded Insert 5mm
Housing material		ABS
Dimensions	length	195 mm
	width	130 mm
	height	174 mm (±1 mm)
Approx. Weight		11.3 kg
Packing		1 pcs/box

Typical applications:
- Wheelchairs
- Lawnmower
- Vacuum cleaner
- Medical
- Equipment
- Toys

- Valve Regulated Maintenance Free
- Absorbent Glassmat Technology
- Built to comply with DIN 43534, IEC896-2, BS6290-pt.4, EUROBAT
- Low self discharge
- Classified as non- spillable and Non Dangerous goods by IATA, FAA, ADR, IMDG
- Can be discharged or stored in any position without leakage
- Cannot be charged while the terminal is downward.

Charging characteristics

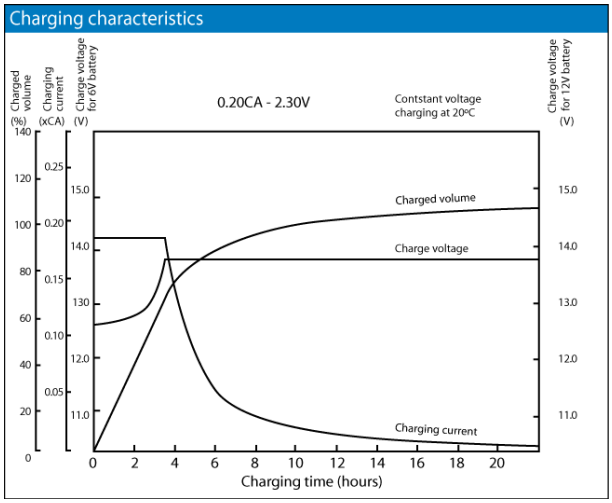

Discharge characteristics curves

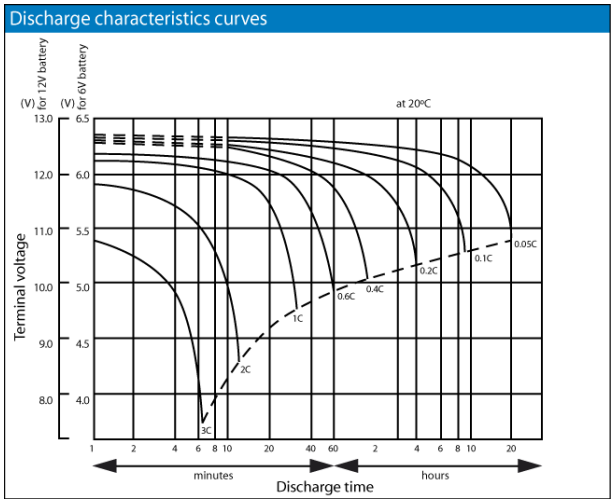

Relationship between charging voltage and temperature

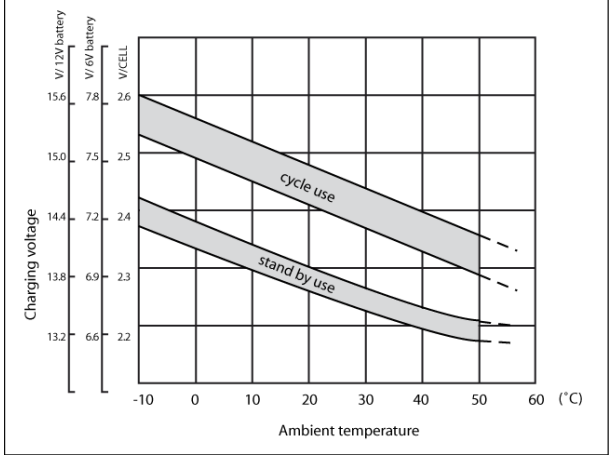

Cycle service life in relation to depth and discharge

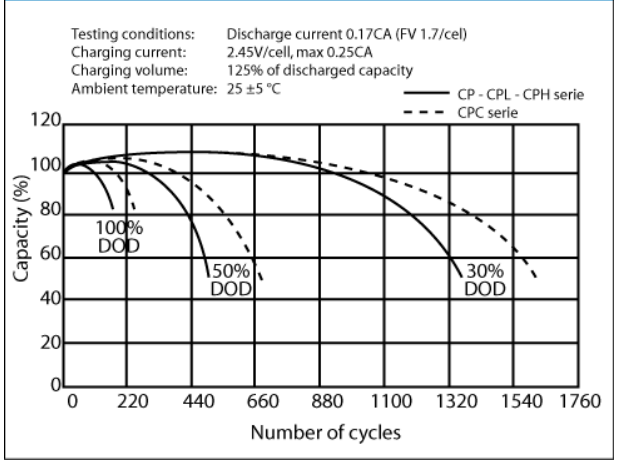

Models available

Model	Capacity (Ah)	Dimensions (mm)	Weight
CPC 225 – 6	6V/225	243 x 187.5 x 275	31.80 kg
CPC 9 – 12	9	151 x 65 x 100	2.84 kg
CPC 10 – 12	10	151 x 65 x 111	3.34 kg
CPC 12 – 12	12	151 x 98 x 101	4.14 kg
CPC 18 – 12	18	181.5 x 77 x 167.5	6.00 kg
CPC 26 – 12	26	166.5 x 175 x 125	7.90 kg
CPC 33 – 12	33	195 x 130 x 174	11.30 kg
CPC 40 – 12	40	197 x 165 x 170	13.10 kg
CPC 50 – 12	50	197 x 165 x 170	14.50 kg
CPC 55 – 12	55	228 x 138 x 208	16.20 kg
CPC 60 – 12	60	278 x 175 x 190	21.20 kg
CPC 75 – 12	75	259 x 168 x 208	24.58 kg
CPC 80 – 12AJ	80	350 x 174 x 190	24.76 kg
CPC 90 – 12	90	306 x 173 x 212	26.06 kg
CPC 110 – 12	110	330 x 173 x 220	30.14 kg
CPC 120 – 12	120	407 x 175 x 224	37.02 kg
CPC 135 - 12	135	345 x 172 x 280	46.06 kg
CPC 150 – 12	150	483 x 168 x 237	47.50 kg
CPC 160 – 12	160	532 x 207 x 221	50.00 kg
CPC 200 – 12	200	522 x 239 x 225	61.00 kg
CPC 250 – 12	250	520 x 268 x 226	73.00 kg